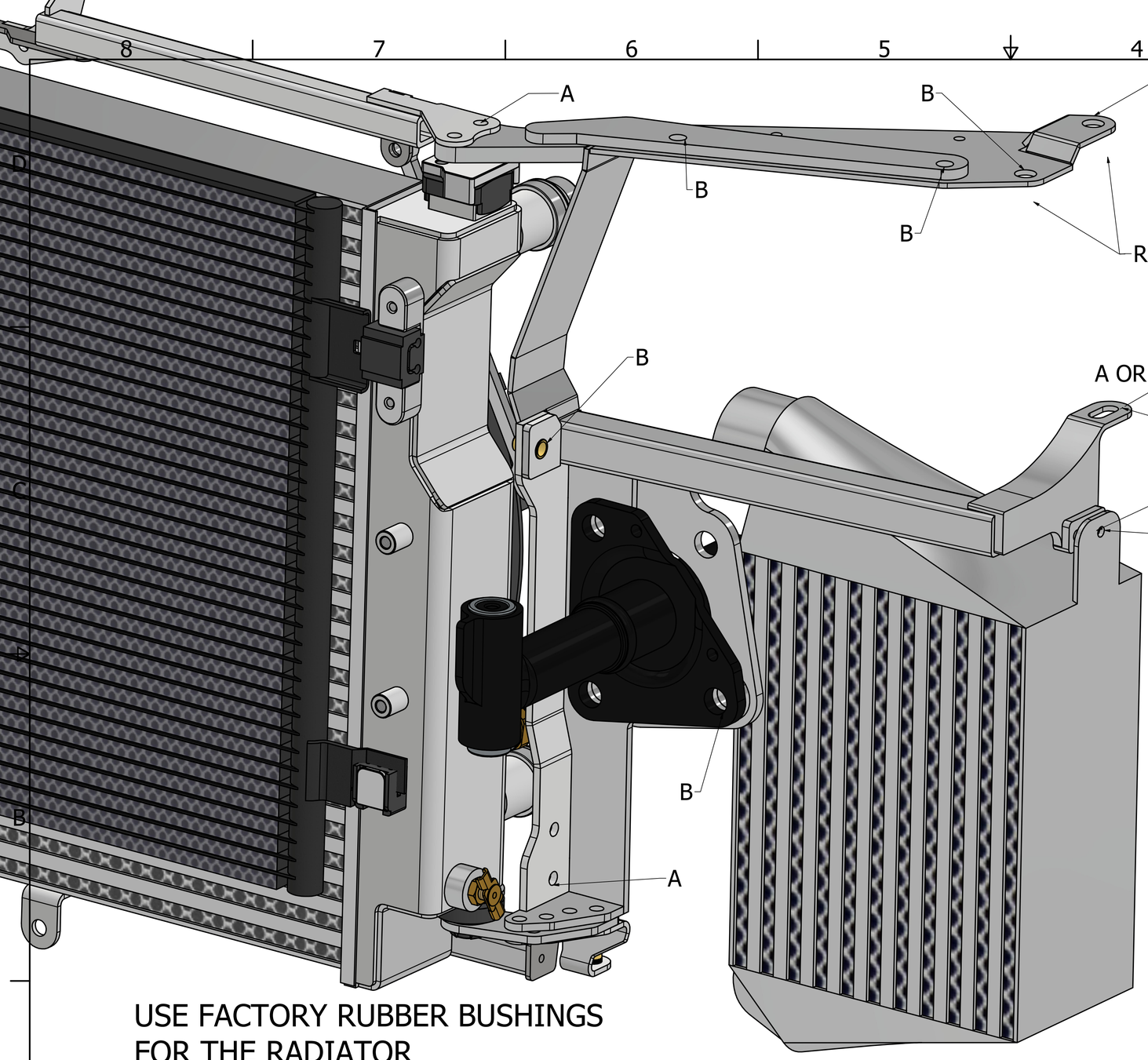

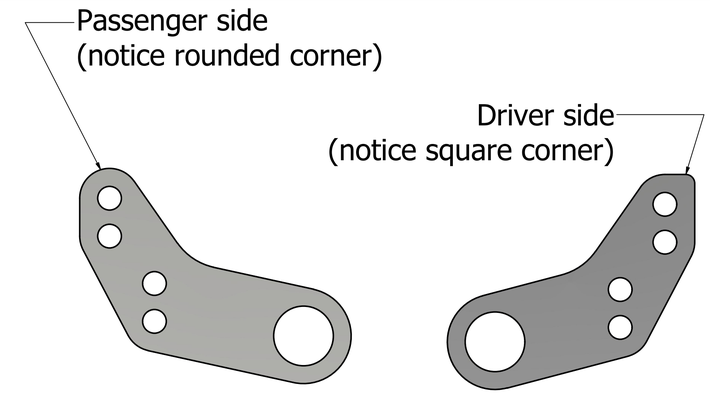

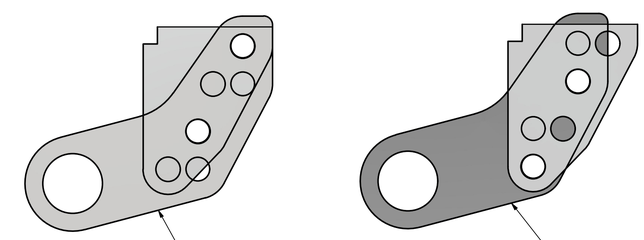

USE FACTORY RUBBER BUSHINGS
FOR THE RADIATOR

A - USE INCLUDED HARDWARE
B - USE ORIGINAL HARDWARE

DRAWN GEORGE VAN BUREN	4/13/2018	GEORGE VAN BUREN
CHECKED GV	4/14/2018	
QA		TITLE ASSY. INSTRUCTIONS
MFG	4/14/2018	
APPROVED	4/14/2018	
		SIZE D / DWG NO B5INS01 / REV 4
		SCALE / SHEET 1 OF 1